CONICA Elite



KMC GLASS

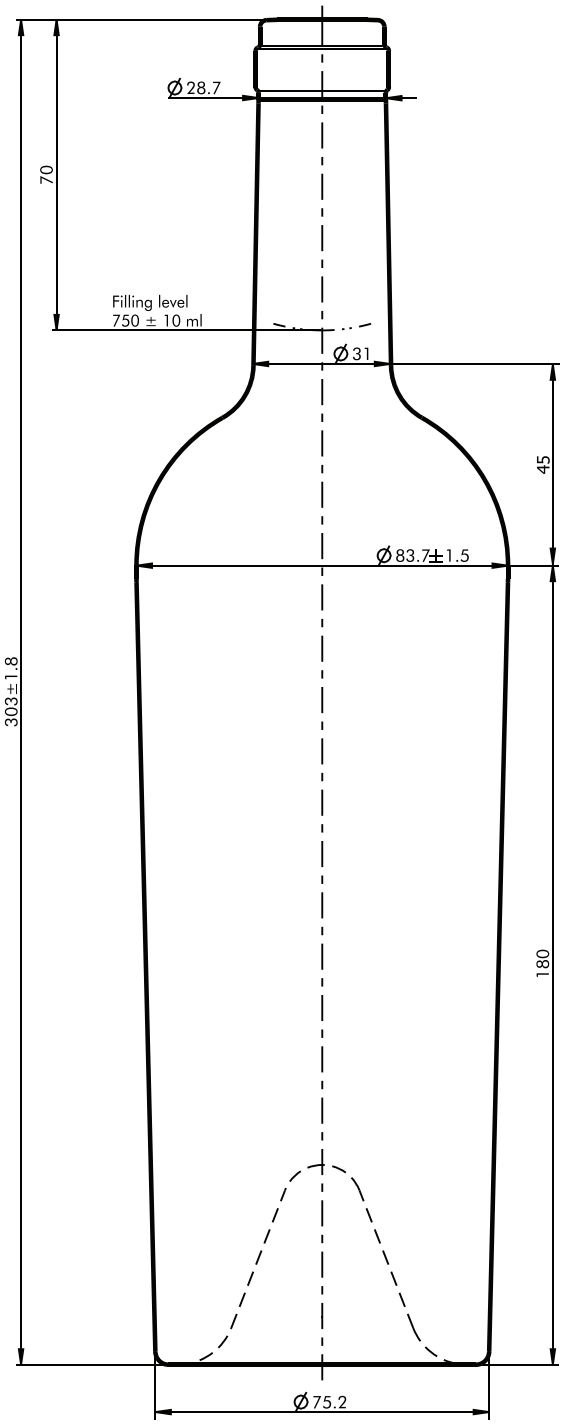

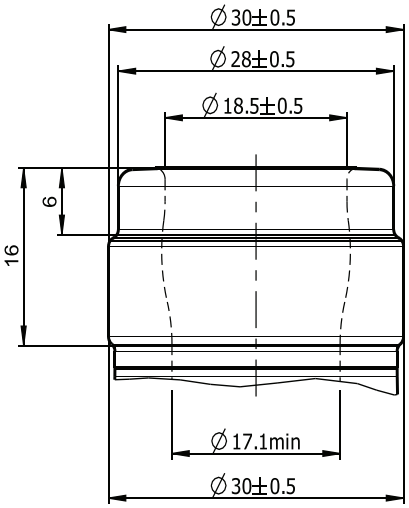

- Conica Elite
- Weight - 705 g
- Filling CAP - 750 ± 10 ml
- Color - Olive Green
- Diameter - 83.7 ±1.5
- Entrance bore diameter - 18.5

www.kmc.glass_
sales@kmc.glass

KMC GLASS